HSF Pb RoHS

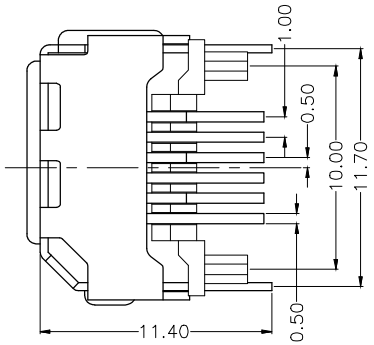

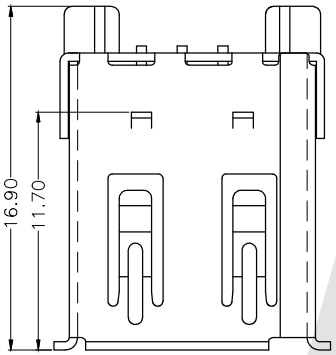

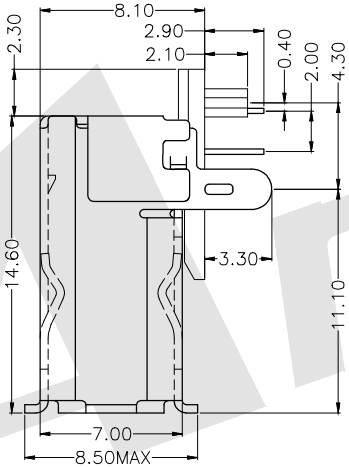

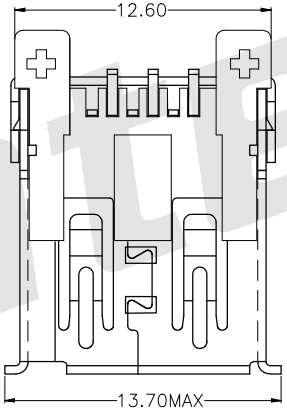

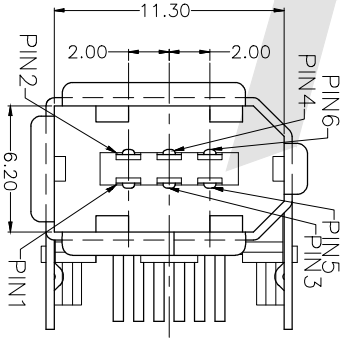

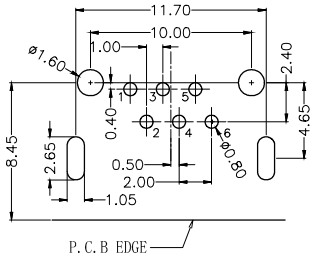

RECOMMENDED P.C.B. PATTERN LAYOUT
COMPONENT SIDE

Specifications:
Current Rating: 1.5A Max
Contact Resistance: 50 milliohms MAX
Dielectric Withstanding Voltage:500V AC AT Sea Levol
Insulation Resistance: 500 Megohms MIN
Operating Temperature: -20° C to +85° C
Housing:
Temperature Thermoplastics,LCP UL 94V-0
Contact:
Copper Alloy T=0.25mm Piated Gold in Mating Area;
Tin On Solder Talls
Shell:
Copper Alloy/Steel T=0.40mm Nickel/Plating
Ordering Code:

IEFR03 - X - X - X - X - X
① ② ③ ④ ⑤ ⑥

① Series No:

② Shell Material:
B:Brass I:Iron
S:stainless steel

③ Insulator Material:
P:PBT+30%GF
L:LCP

④ Contact Material:
B:Brass
P:phosphor copper

⑤ Contact Plating
G0: Gold flash
G1: 3u″ Gold
G2: 5u″ Gold
G3: 10u″ Gold
G4: 15u″ Gold
G5: 30u″ Gold

⑥ Packing
A:Tray
B:Bag
C:Tube
D:Tape Reel

REV	DESCRIPTION	DATE

Unless Otherwise specified tolerance
X. ±0.35 X.XX: ±0.20
X.X: ±0.25 X.XXX: ±0.15

SCALE: As Shown	UNIT: mm
DRAW Lv Xun Hua	DATE 29/06/2019
CHECK BobYang	DATE 29/06/2019

3rd ANGLE PROJECTION

ANTENK ELECTRONICS CO,.LTD
Http://www.antenk.com
E-mail:sales@antenk.com

TITLE:
1394 6P Receptacle
Angle DIP Type With Latch

DRAWING NO: IEFR03-XXXXX
PRODUCT NO: IEFR03-XXXXX